ASSOCIATED MATERIALS
INCORPORATED

3773 STATE ROAD
CUYAHOGA FALLS, OH 44223

L. F. SCHMIDT
LICENSE
No. 43409
STATE OF FLORIDA
PROFESSIONAL ENGINEER

Digitally signed by Lyndon F Schmidt
Date: 2023.09.20 14:37:33 -04'00'

This item has been digitally signed and sealed by **L. F. Schmidt, P.E.** on the date adjacent to the seal.

Printed copies of this document are not considered signed and sealed and the signature must be verified on any electronic copies.

THIS PRODUCT APPROVAL IS VALID ONLY FOR THE STATE OF FLORIDA

SERIES 1900 MODEL 1920
TWIN SINGLE HUNG WINDOW
w/ NAILING FIN
"NON-IMPACT"

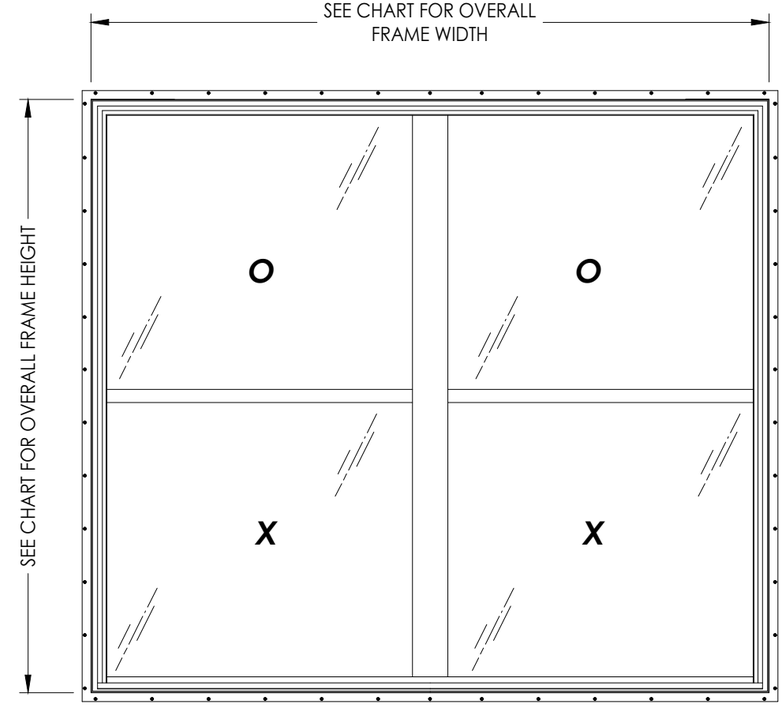

GENERAL NOTES

1. This product has been evaluated and is in compliance with the 8th Edition (2023) Florida Building Code (FBC) structural requirements excluding the "High Velocity Hurricane Zone" (HVHZ).
2. Product anchors shall be as listed and spaced as shown on details. Anchor embedment to base material shall be beyond wall dressing or stucco.
3. When used in areas requiring wind borne debris protection this product must be protected with an impact resistant covering that complies with FBC Sections 1609.1.2 & R301.2.1.2.
4. Site conditions that deviate from the details of this drawing require further engineering analysis by a licensed engineer or registered architect.

OVERALL FIN DIMENSION	OVERALL FRAME DIMENSION	FIXED WINDOW OVERALL D.L.O. DIMENSION (O)	SASH OVERALL D.L.O. DIMENSION (X)	GLASS TYPE	DESIGN PRESSURE (PSF)	
					POSITIVE	NEGATIVE
91.0" x 78.0"	88.0" x 75.0"	39.25" x 34.25"	39.19" x 34.38"	G2	+15.0	-15.0
99.0" x 87.0"	96.0" x 84.0"	43.25" x 38.75"	43.25" x 38.75"	G1	+25.0	-25.0

TABLE OFCONTENTS

SHEET#	DESCRIPTION
1	Typical elevations, design pressures and general notes
2	Vertical & horizontal cross sections
3	Vertical & horizontal cross sections
4	Buck anchoring
5	Frame anchoring
6	Bill of materials, glazing detail & components

Documents Prepared By:
Lyndon F. Schmidt
P.E. No. 43409
RW BUILDING CONSULTANTS, INC.
P.O. Box 230, Valrico, FL 33595
Phone No.: 813.659.9197
FBPE Registry No. 9813

PRODUCT: SINGLE HUNG WINDOW

PART OR ASSEMBLY: TYPICAL ELEVATION, DESIGN PRESSURE AND GENERAL NOTES

NO.	DATE	REVISIONS	BY

DATE: 9/20/23
SCALE: N.T.S.
DWG. BY: RW
CHK. BY: LFS
DRAWING NO.: FL-10465.16
SHEET 1 OF 6

© 2023 R.W. Building Consultants Inc.

Z:\2023 FBC Drawings\Associated Materials, Inc\FL-10465 R15\FL-10465.15-16.dwg

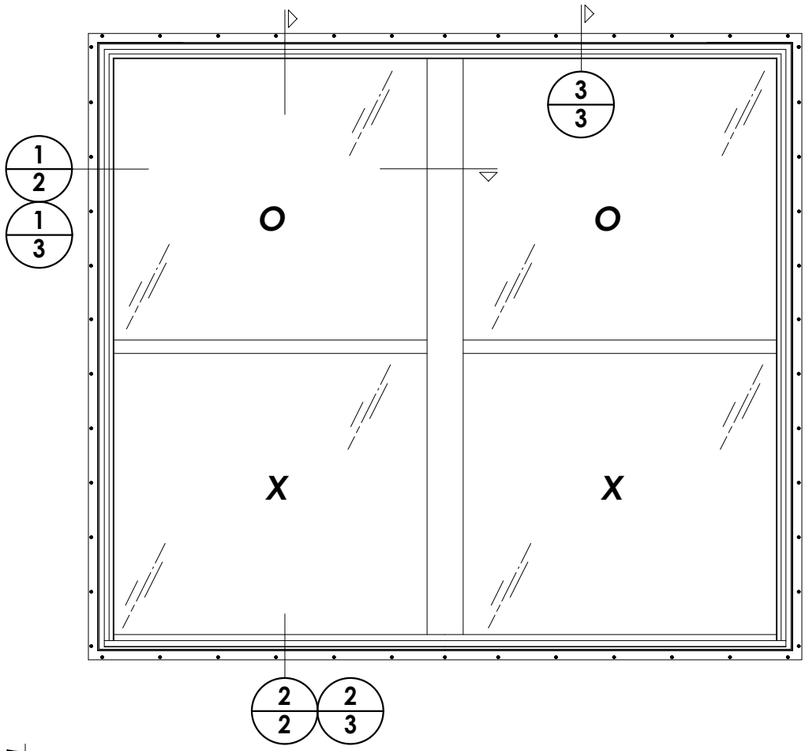

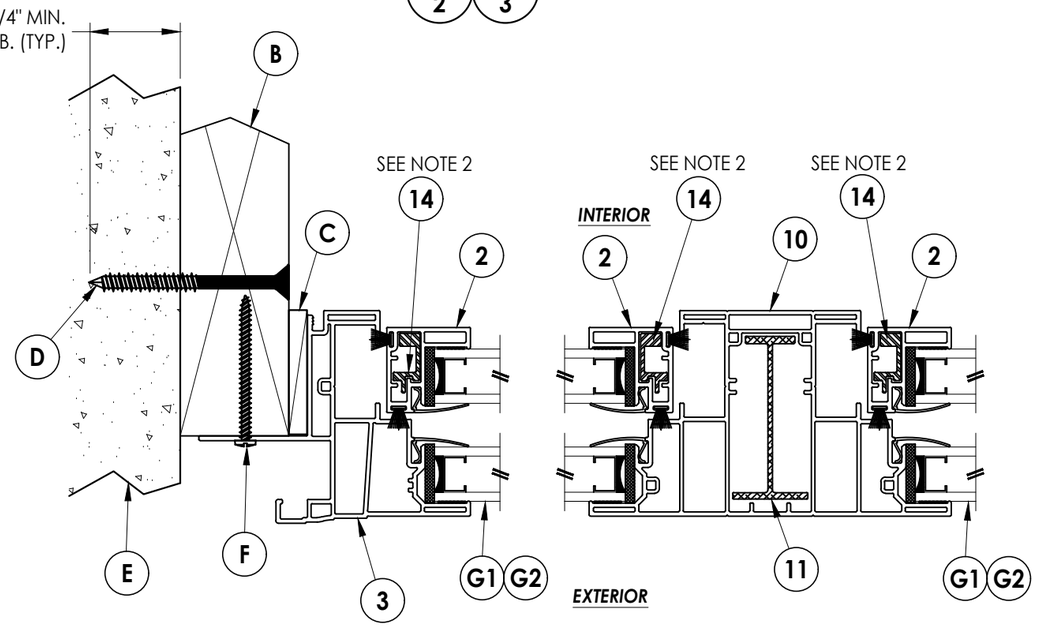

1/2 HORIZONTAL CROSS SECTION
2x Buck Construction

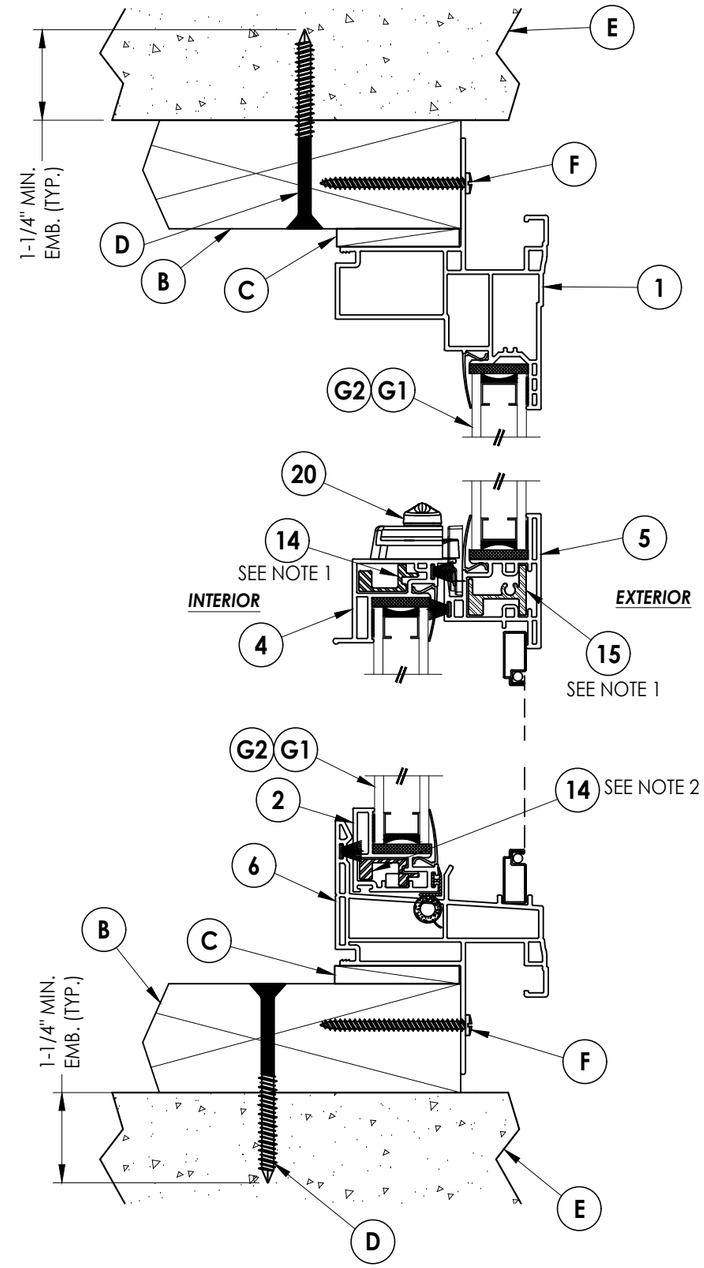

2/2 VERTICAL CROSS SECTION
2x Buck Construction

REINFORCEMENT NOTES:

1. *LOCK & MEETING RAIL REINFORCEMENTS ARE REQUIRED FOR ALL WINDOW FRAME SIZES.*
2. *SASH STILE & BOTTOM RAIL REINFORCEMENTS ARE REQUIRED FOR EACH OF THE FOLLOWING:*
   A. *ALL WINDOW FRAME SIZES > 88" x 75".*
   B. *ALL WINDOW FRAME SIZES WITH DESIGN PRESSURE > 15 PSF.*

Documents Prepared By:
Lyndon F. Schmidt
P.E. No. 43409

RW BUILDING CONSULTANTS, INC.
P.O. Box 230, Valrico, FL 33595
Phone No.: 813.659.9197
FBPE Registry No. 9813

PRODUCT: *SINGLE HUNG WINDOW*

PART OR ASSEMBLY: *VERTICAL & HORIZONTAL CROSS SECTIONS*

NO.	DATE	REVISIONS	BY

DATE: 9/20/23
SCALE: N.T.S.
DWG. BY: RW
CHK. BY: LFS
DRAWING NO.: FL-10465.16
SHEET 2 OF 6

© 2023 R.W. BUILDING CONSULTANTS INC.

Z:\2023 FBC Drawings\Associated Materials, Inc\FL-10465 R15\FL-10465.15-16.dwg

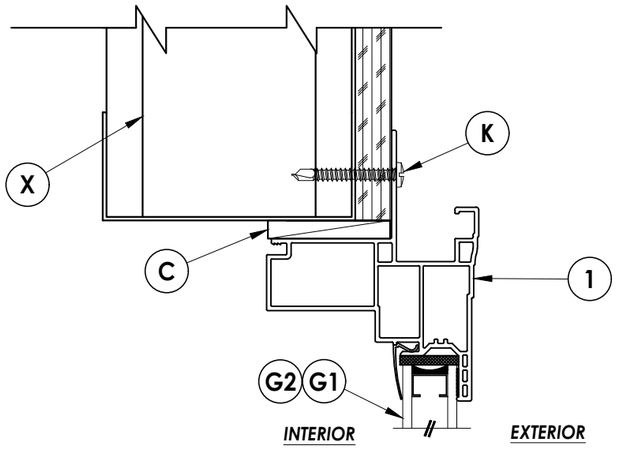

3/3 VERTICAL CROSS SECTION
Steel Stud Construction

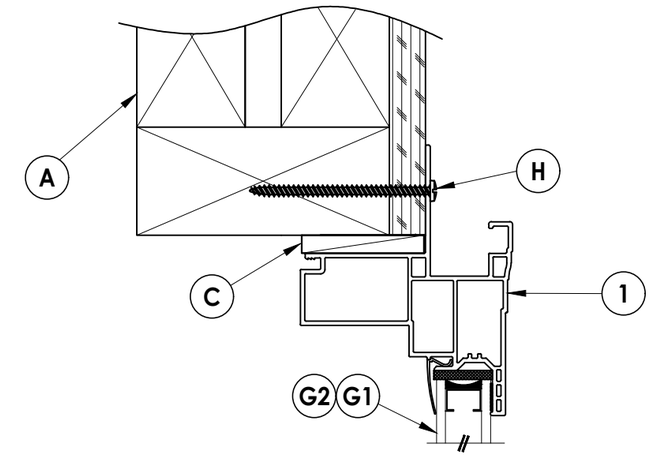

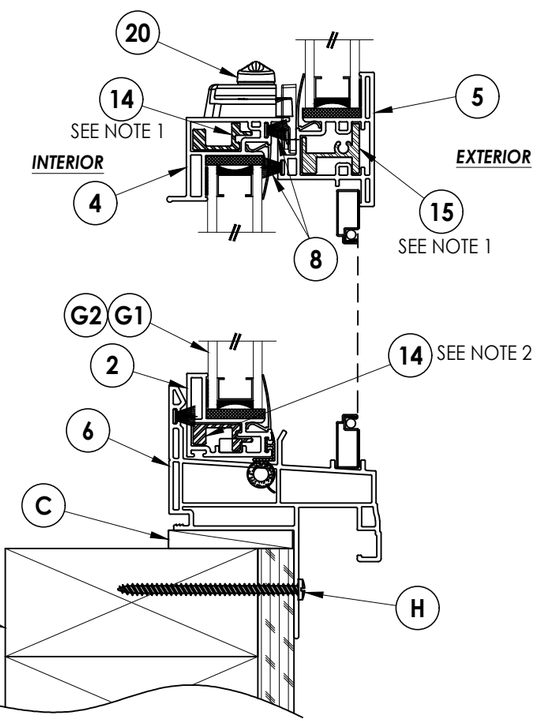

2/3 VERTICAL CROSS SECTION
Stud Construction

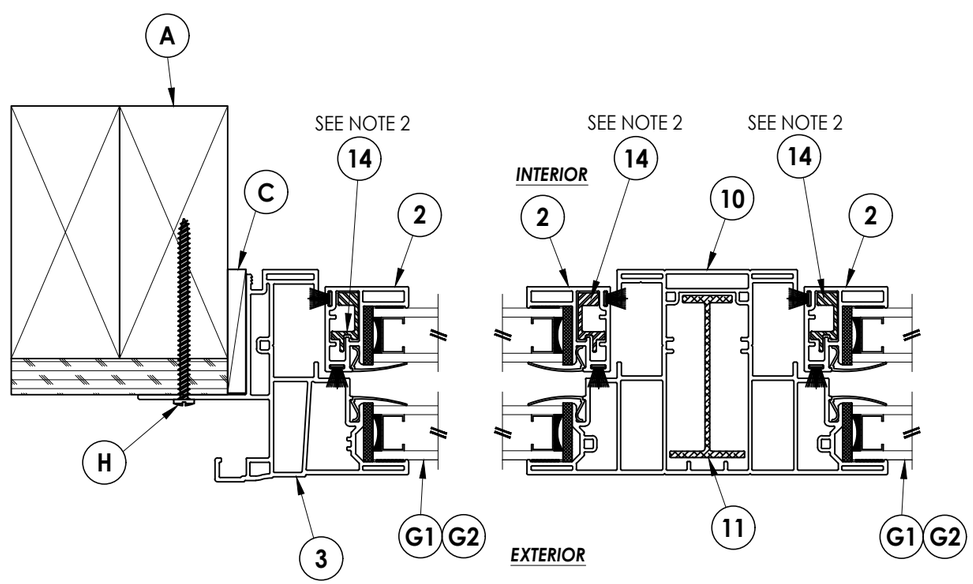

1/3 HORIZONTAL CROSS SECTION
Stud Construction

REINFORCEMENT NOTES:

1. *LOCK & MEETING RAIL REINFORCEMENTS ARE REQUIRED FOR ALL WINDOW FRAME SIZES.*
2. *SASH STILE & BOTTOM RAIL REINFORCEMENTS ARE REQUIRED FOR EACH OF THE FOLLOWING:*
   A. *ALL WINDOW FRAME SIZES > 88" x 75".*
   B. *ALL WINDOW FRAME SIZES WITH DESIGN PRESSURE > 15 PSF.*

Documents Prepared By:
Lyndon F. Schmidt
P.E. No. 43409

RW BUILDING CONSULTANTS, INC.
P.O. Box 230, Valrico, FL 33595
Phone No.: 813.659.9197
FBPE Registry No. 9813

PRODUCT: SINGLE HUNG WINDOW

PART OR ASSEMBLY: VERTICAL & HORIZONTAL CROSS SECTIONS

NO.	DATE	REVISIONS	BY

DATE: 9/20/23
SCALE: N.T.S.
DWG. BY: RW
CHK. BY: LFS
DRAWING NO.: FL-10465.16
SHEET 3 OF 6

© 2023 R.W. Building Consultants Inc.

Z:\2023 FBC Drawings\Associated Materials, Inc\FL-10465 R15\FL-10465.15-16.dwg

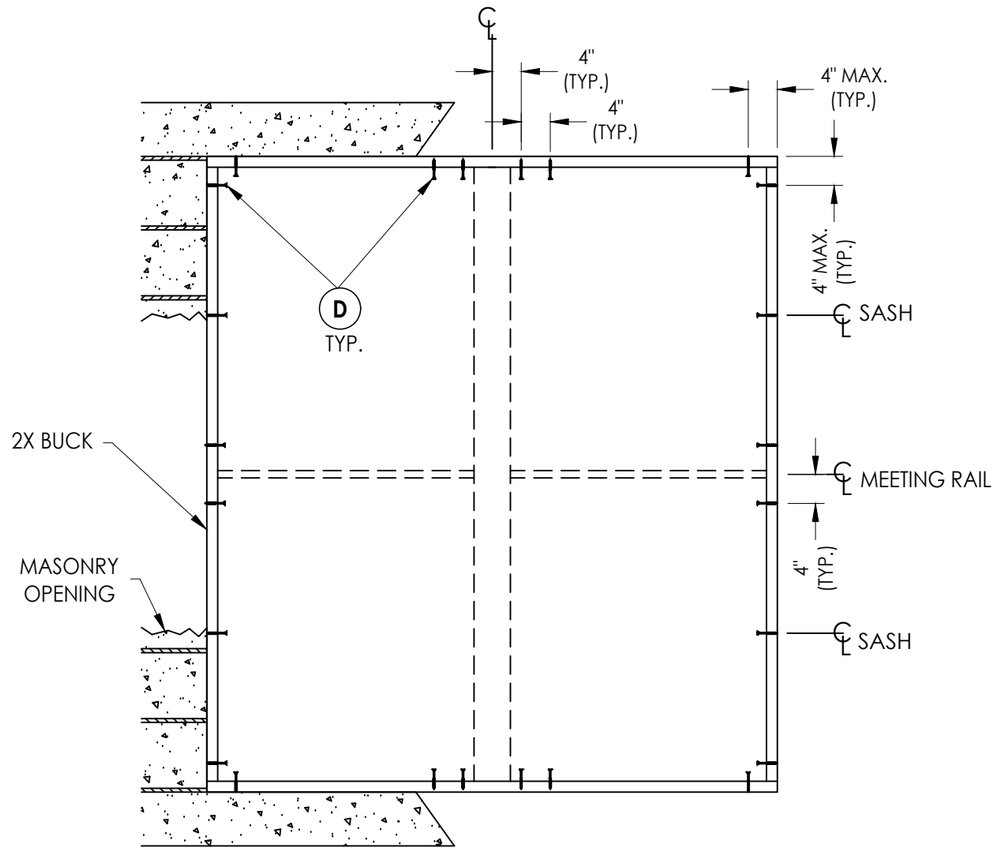

BUCK ANCHORING

CONCRETE ANCHOR NOTES:

1. *Concrete anchor locations at the corners may be adjusted to maintain the min. edge distance to mortar joints.*
2. *Concrete anchor locations noted as "MAX. ON CENTER" must be adjusted to maintain the min. edge distance to mortar joints, additional concrete anchors may be required to ensure the "MAX. ON CENTER" dimension are not exceeded.*
3. *Concrete anchor table:*

ANCHOR TYPE	ANCHOR SIZE	MIN. EMBEDMENT	MIN. CLEARANCE TO MASONRY EDGE	MIN. CLEARANCE TO ADJACENT ANCHOR
ITW TAPCON®	1/4"	1-1/4"	2"	4"
DeWALT ULTRACON+®	1/4"	1-1/4"	1"	4"

WOOD SCREW INSTALLATION NOTES:

1. *Maintain a minimum 5/8" edge distance, 1" end distance, & 1" o.c. spacing of wood screws to prevent the splitting of wood.*

Documents Prepared By:
Lyndon F. Schmidt
P.E. No. 43409

RW BUILDING CONSULTANTS, INC.
P.O. Box 230, Valrico, FL 33595
Phone No.: 813.659.9197
FBPE Registry No. 9813

PRODUCT: *SINGLE HUNG WINDOW*

PART OR ASSEMBLY: *BUCK ANCHORING*

REVISIONS

NO.	DATE	BY

DATE: 9/20/23
SCALE: N.T.S.
DWG. BY: RW
CHK. BY: LFS
DRAWING NO.: FL-10465.16
SHEET 4 OF 6

© 2023 R.W. Building Consultants Inc.

Z:\2023 FBC Drawings\Associated Materials, Inc\FL-10465 R15\FL-10465.15-16.dwg

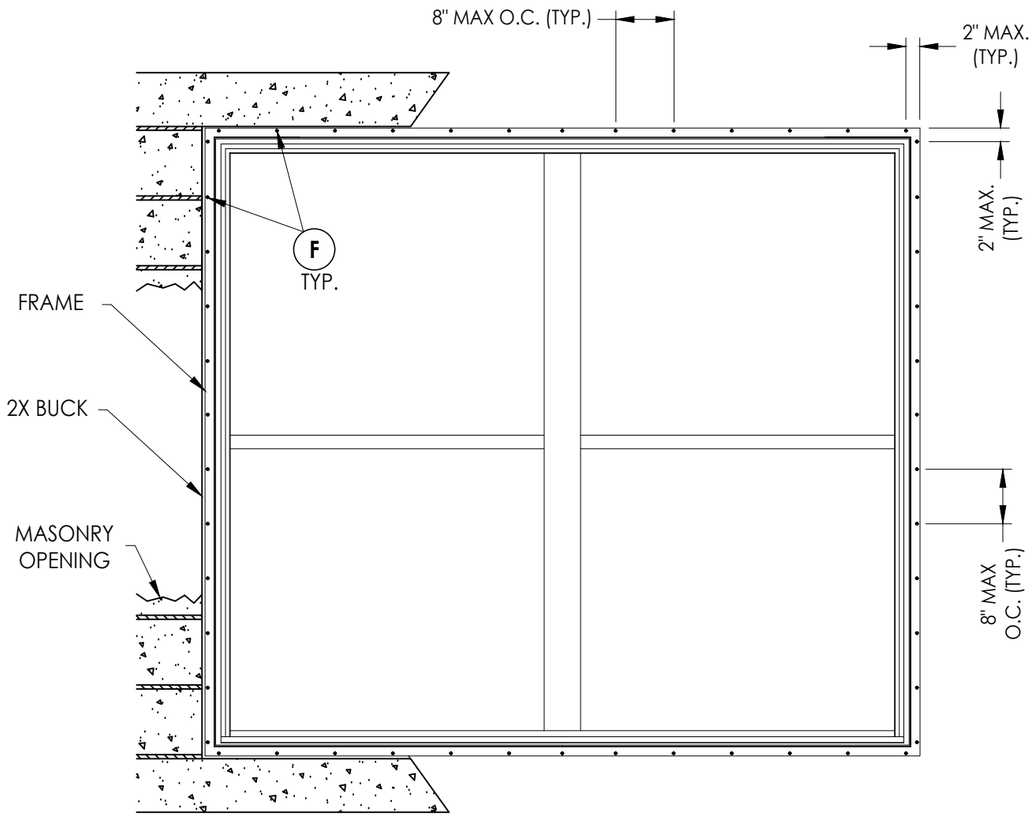

FRAME ANCHORING
Masonry 2X Buck Construction

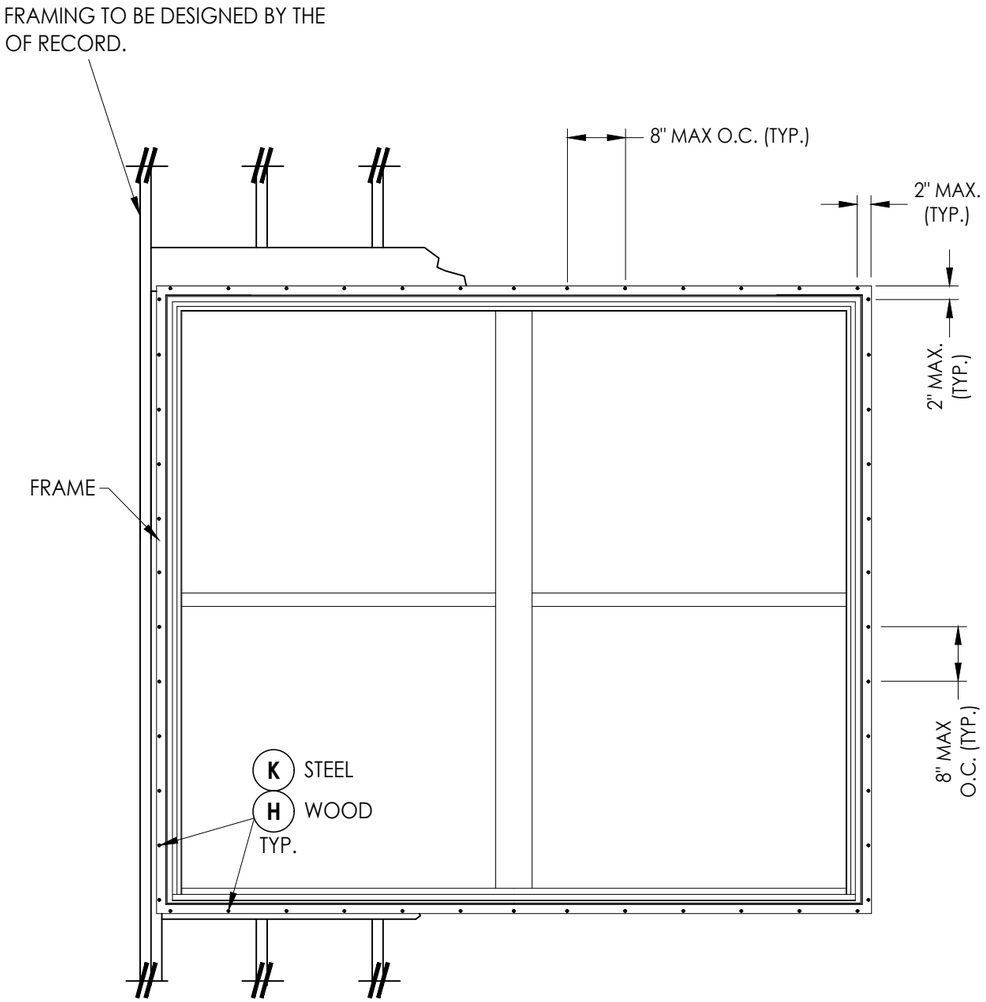

FRAME ANCHORING
Stud Construction

Documents Prepared By:
Lyndon F. Schmidt
P.E. No. 43409
RW BUILDING CONSULTANTS, INC.
P.O. Box 230, Valrico, FL 33595
Phone No.: 813.659.9197
FBPE Registry No. 9813

PRODUCT: *SINGLE HUNG WINDOW*

PART OR ASSEMBLY: *FRAME ANCHORING*

NO.	DATE	REVISIONS	BY

DATE: *9/20/23*
SCALE: *N.T.S.*
DWG. BY: *RW*
CHK. BY: *LFS*
DRAWING NO.: *FL-10465.16*
SHEET 5 OF 6

© 2023 R.W. Building Consultants Inc.

Z:\2023 FBC Drawings\Associated Materials, Inc\FL-10465 R15\FL-10465.15-16.dwg

BILL OF MATERIALS		
ITEM #	DESCRIPTION	MATERIAL
A	2X FRAMING (SG >= 0.42)	WOOD
B	2X BUCK (SG >= 0.42)	WOOD
C	1/4" MAX. SHIM SPACE	-
D	1/4" X 2-3/4" PFH DeWALT OR ITW CONCRETE SCREW	STEEL
E	MASONRY - 3,000 PSI MIN. CONCRETE CONFORMING TO ACI 301 OR HOLLOW BLOCK CONFORMING TO ASTM C90	CONCRETE
F	#8 X 2" PPH SMS (1-3/4" MIN. EMBEDMENT)	STEEL
H	#8 X 2-1/2" PPH SMS (1-3/4" MIN. EMBEDMENT)	STEEL
K	#10 PPH SELF-DRILLING SMS	STEEL
X	STEEL STUD Min. Thk .033" (ASTM A653 GRADE 33 Fy=33 Ksi Min, Fu=45 Ksi Min)	STEEL
1	EXTRUDED VINYL FRAME HEAD*	RIGID PVC
2	EXTRUDED VINYL SASH STILE/RAIL*	RIGID PVC
3	EXTRUDED VINYL FRAME JAMB*	RIGID PVC
4	EXTRUDED VINYL LOCK STILE*	RIGID PVC
5	EXTRUDED VINYL MEETING RAIL*	RIGID PVC
6	EXTRUDED VINYL SILL*	RIGID PVC
7	EXTRUDED VINYL GLAZING BEAD*	RIGID PVC
8	WEATHERSTRIP (FIN PILE)	-
10	INTEGRAL MULLION*	RIGID PVC
11	MULLION REINFORCEMENT (S-048)(6005A-T5)	ALUM
14	SASH / STILE & RAIL REINFORCEMENT (S-047)(6063-T5)	ALUM
15	MEETING RAIL REINFORCEMENT (S-065)(6063-T5)	ALUM
20	CAM LOCK	-

*THE APPROVED WHITE RIGID PVC EXTERIOR EXTRUSIONS FOR WINDOWS ARE TO BE PRODUCED BY EXTRUDERS LICENSEES IN "AAMA CERTIFICATION PROGRAMS FOR RIGID PVC EXTRUSIONS."

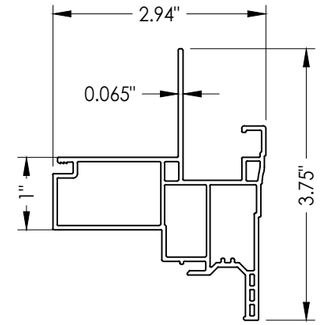

1 FRAME HEAD

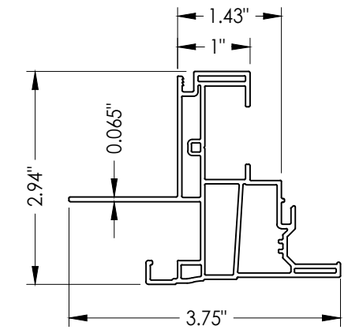

3 FRAME JAMB

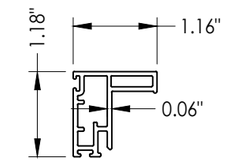

2 SASH STILE/RAIL

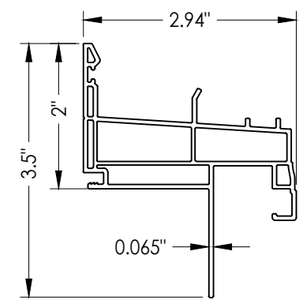

6 SILL

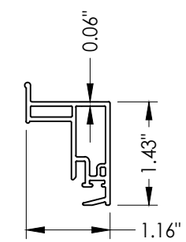

4 LOCK STILE

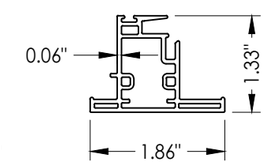

5 MEETING RAIL

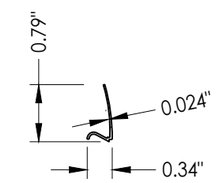

7 GLAZING BEAD

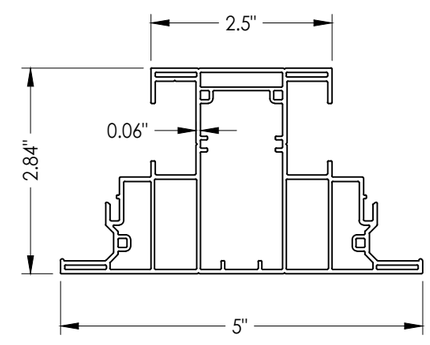

10 INTEGRAL MULLION

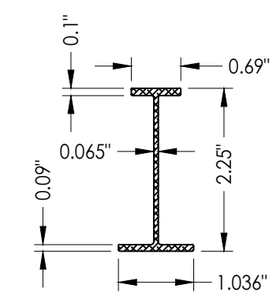

11 MULLION REINFORCEMENT

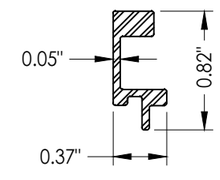

14 SASH/STILE & RAIL REINFORCEMENT

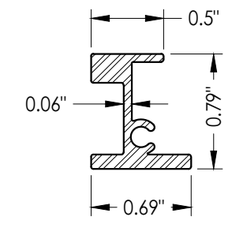

15 MEETING RAIL REINFORCEMENT

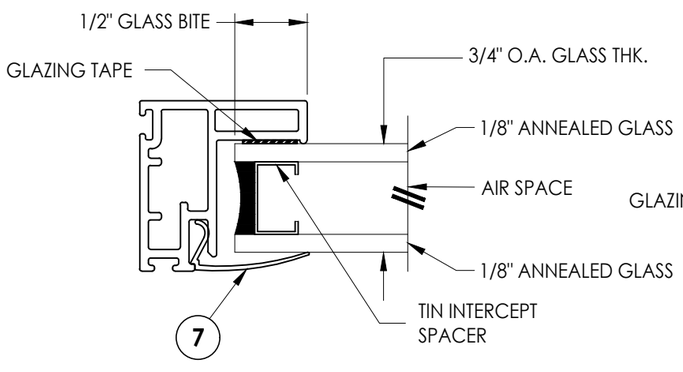

G1 GLAZING DETAIL

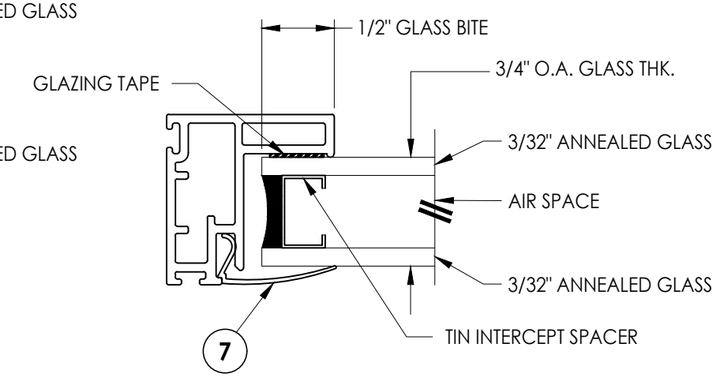

G2 GLAZING DETAIL

Documents Prepared By:
Lyndon F. Schmidt
P.E. No. 43409
RW BUILDING CONSULTANTS, INC.
P.O. Box 230, Valrico, FL 33595
Phone No.: 813.659.9197
FBPE Registry No. 9813

PRODUCT: SINGLE HUNG WINDOW

PART OR ASSEMBLY: BILL OF MATERIALS, GLAZING DETAILS & COMPONENTS

NO.	DATE	REVISIONS	BY

DATE: 9/20/23
SCALE: N.T.S.
DWG. BY: RW
CHK. BY: LFS
DRAWING NO.: FL-10465.16
SHEET 6 OF 6

© 2023 R.W. Building Consultants Inc.

Z:\2023 FBC Drawings\Associated Materials, Inc\FL-10465 R15\FL-10465.15-16.dwg